PRODUCT NO	POS NO'S WITH CONTACTS	HOUSING MATERIAL	CONTACT PLATING
66011-001/-001LF	2,3,4,5	SUPER TOUGH NYLON UL 94V-0 GRAY	.76u/30u "AU OVER 2.5u/100u "NI
-002/-002LF	ALL		
-003/-003LF	2 & 5		
-004/-004LF	3 & 4	SUPER TOUGH NYLON UL 94V-0 GRAY	
-005/-005LF	2,3,4,5	SUPER TOUGH NYLON UL 94V-0 BLACK	.76u/30u "AU OVER 2.5u/100u "NI
-006/-006LF	ALL	SUPER TOUGH NYLON UL 94V-0 GRAY	.76u/30u " GXT
-007/-007LF	2,3,4,5		.76u/30u " GXT
-008/-008LF	2,3,4,5		1.27u/50u "AU OVER 2.5u/100u "NI
-009/-009LF	ALL	SUPER TOUGH NYLON UL 94V-0 GRAY	0.15u/6u " GOLD FLASH
66011-010/-010LF	2,3,4,5	SUPER TOUGH NYLON UL 94V-0 BLACK	.76u/30u " GXT

LEAD FREE PRODUCT NO.

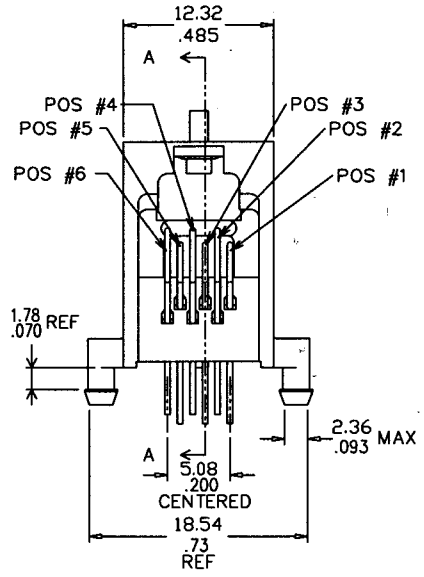

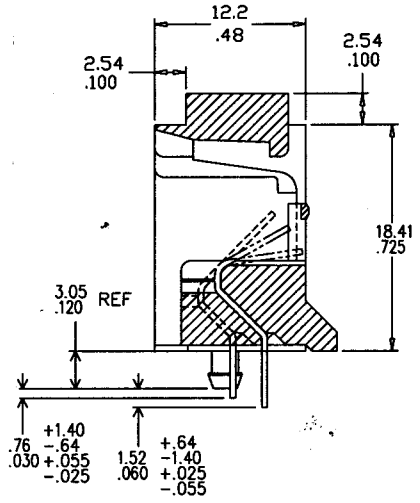

SECTION A-A

NOTES:

1. FOR VISUAL, MECHANICAL AND FUNCTIONAL REQUIREMENTS SEE SPECIFICATION BUS-12-084.
2. GOLD WIRE MATERIAL: PHOS BRONZE ALLOY. UNS-C51000, 135-150M PSI TENSILE PLATING: SEE TABLE
3. DIMENSIONAL TOLERANCE: ±.25/±.010 AT BASE ±.64/±.025 AT TIP
4. FOR ADDITIONAL APPLICATION AND MOUNTING INFORMATION SEE DRAWING TA-390.
5. HOUSING MATERIAL: SEE TABLE.
6. TEST METHOD PER UL-1863. SECTION 22.2
7. THE PRODUCT MEETS EUROPEAN UNION DIRECTIVES AND OTHER COUNTRY REGULATIONS AS DESCRIBED IN GS-22-008.
8. THE HOUSING WILL WITHSTAND EXPOSURE TO 260°C PEAK TEMPERATURE FOR 10 SECONDS IN A WAVE SOLDER APPLICATION WITH A 1.60mm MINIMUM THICK CIRCUIT BOARD.
9. IF LF P/N PACKAGING MEETS GS-14-920 SPECIFICATION.

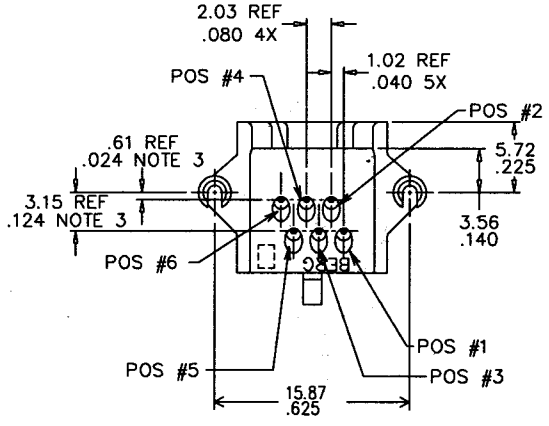

mat'l code				tolerance unless otherwise specified			CUSTOMER COPY	FCI
rev.	ecn no.	dr	date	linear	.0 ± 0.25		projection	title MOD JACK ASSY (623 PCB)
H	REDRAWN ADD-005	RLS	06/01/87		.00 ± 0.13			
J	ADDED-007	MSC	08/12/88		.000± 0.05			
K	EXTEND STANDOFF	JWS	10/19/89	angles	± 2°			
L	T10087	JT	4/4/91	dr	R. SEIPLE	06/01/87	unit mm/inch	product family / code TWN
M	T60059	CL	02/13/96	engr	J. SHUEY	06/01/87		size A3 / dwg no. 66011 / sheet 1 OF 1
N	N05-0019	YS	01/27/05	chr	J. SHUEY	06/01/87	scale 2.5/1	
				appd	J. SHUEY	06/01/87		
sheet	revision	N						
index	sheet	1						

PDM: Rev:N STATUS:Released Printed: Mar 09, 2007

Tous droits strictement reserves. Reproduction ou communication a des tiers int sous quelque forme que ce soit sans autorisation ecrite du propietaire. propriete de c BERG ELECTRONICS. Droits de reproduction BERG ELECTRONICS bv

All rights strictly reserved. Reproduction or issue to third parties in any for whatever is not permitted without written authority from the proprietor. Property of c BERG ELECTRONICS. Copyright BERG ELECTRONICS bv

PDM: Rev:N STATUS:Released Printed: Jan 15, 2010

Downloaded from Arrow.com.